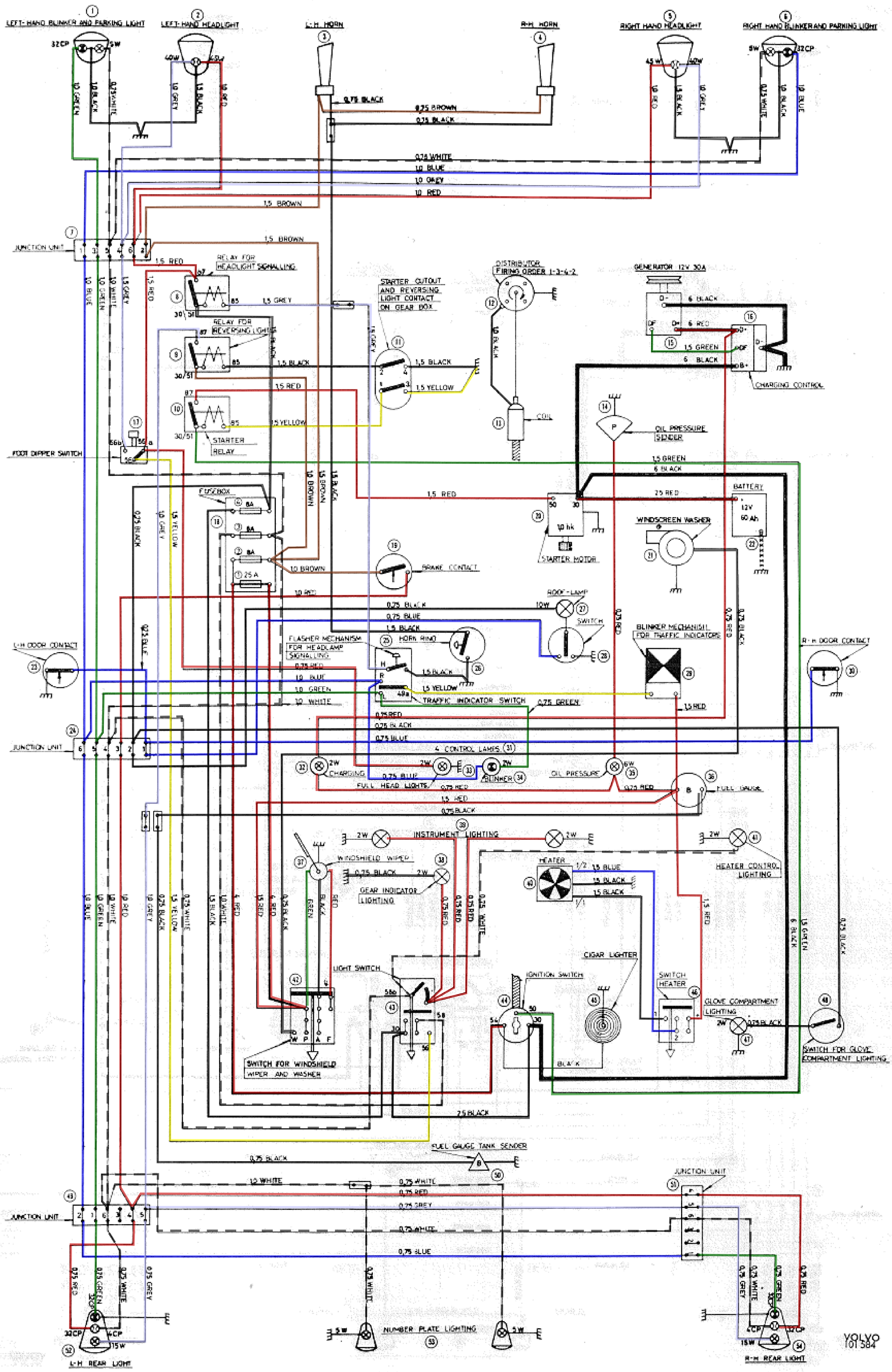

ILLUSTRATION 7. WIRING DIAGRAM

from ch. No. 144400 to ch. No. 312499, 2-door model with automatic transmission

from ch. No. 193800 to ch. No. 234653, 4-door model with automatic transmission